Minor suction-cup holders with valve and fixing screw



It has the same characteristics as the Standard model with valve, but is smaller and lighter, while maintaining considerable robustness and durability.

- Rapid straight and “L” shaped joint
- Plastic tube diameter 4 x 6
- “L” shaped rapid joint = art. PSVM.....L

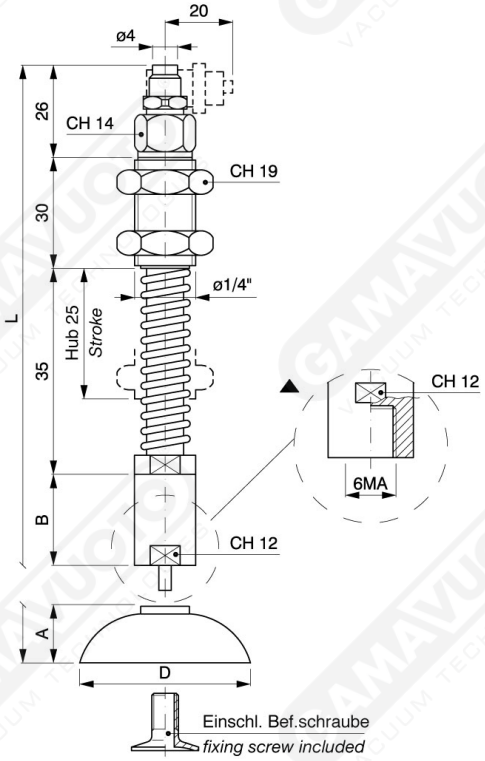

Art.

Art.	A	B	D	L	Fixing screw
PSVM 25/C	8	36	25	135	SUM 10
PSVM 30/C	8	36	30	135	SUM 10
PSVM 35/C	10	36	35	137	SUM 11

NB: the suction cups are supplied on request, specifying the material