Standard suction-cup holders with swivel joint



The technical characteristics are the same as the standard suction-cup holders, but in addition there is a spherical swivel joint, which allows the suction cup to also grip onto inclined surfaces.

- Rapid straight and “L” shaped joints
- Plastic tube diameter 6 x 8
- Rapid “L” shaped joint = art. PSSD.....L

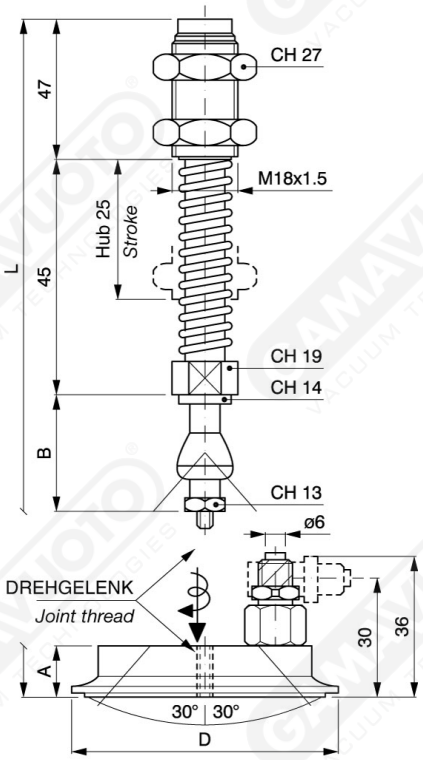

Art.

Art.	A	B	D	L c25	L c55	L c80	Swivel joint
PSSD 67	17	56	65	165	205	238	8 MA
PSSD 90	17.5	56	90	165.5	205.5	238.5	8 MA
PSSD 120	17	56	120	165	205	238	8 MA

NB: the stem is supplied with disc

The suction cups are supplied on request, specifying the material